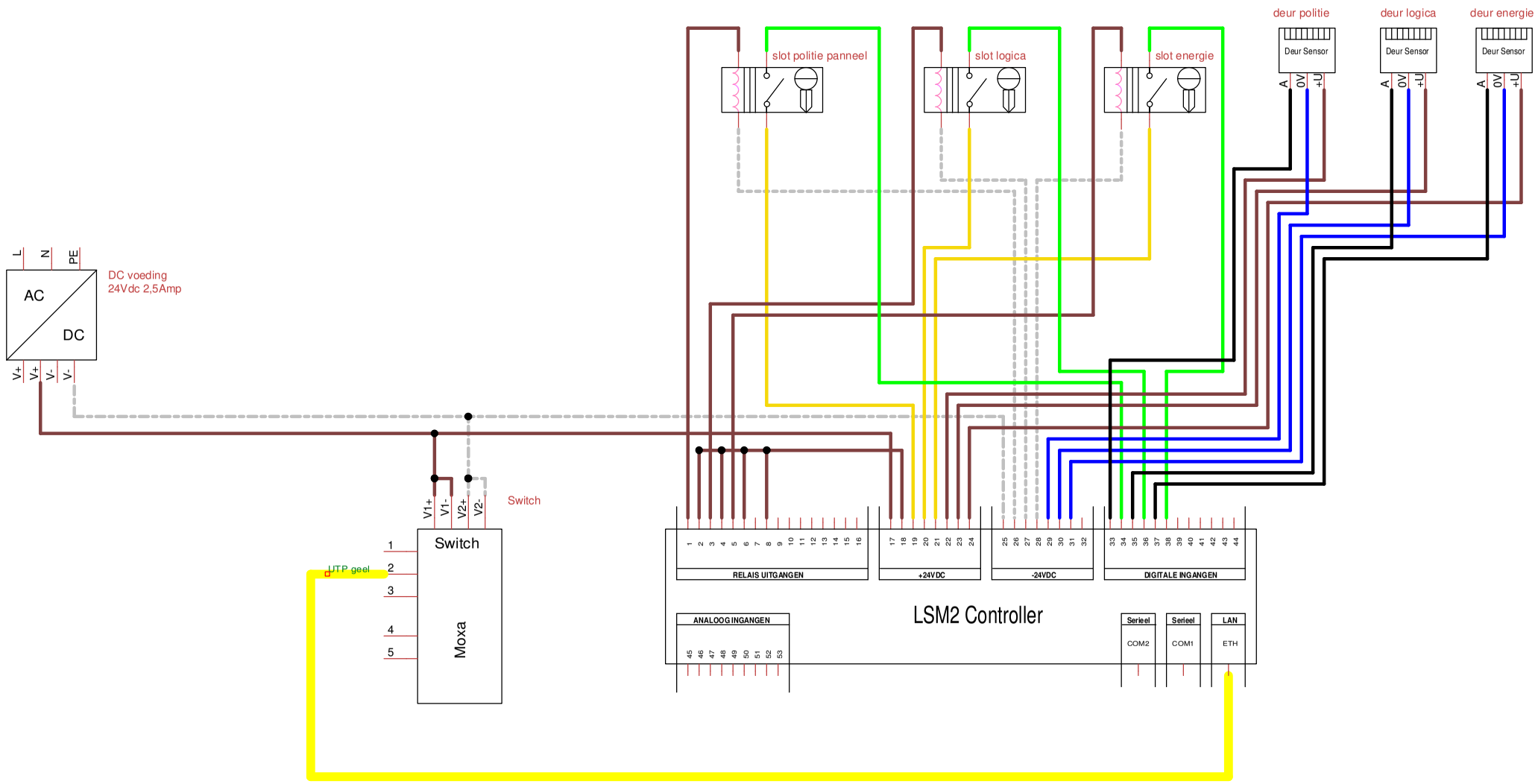

Title Principe Electronisch Sluitplan Sensoren		
Author Arjan Quik BeheerOnline		
File SM2_sluitplan 3 deuren sensoren_05-1-2017.dsn		Document
Revision 1.0	Date 05-10-2017	Sheets 1 of 1